INTERNATIONAL STANDARD

ISO 11040-2

Second edition
2011-04-01

Prefilled syringes —

Part 2: Plunger stoppers for dental local anaesthetic cartridges

Seringues préremplies —

Partie 2: Bouchons-pistons pour cartouches dentaires d'anesthésie locale

Reference number
ISO 11040-2:2011(E)

© ISO 2011

Copyright International Organization for Standardization
Provided by IHS Markit under license with ANSI
No reproduction or networking permitted without license from IHS

Licensee=Becton Dickinson - Loc 1 - 61, 64/5984713001, User=Chiu, Shelly
Not for Resale, 10/14/2019 19:09:34 MDT

COPYRIGHT PROTECTED DOCUMENT

© ISO 2011

All rights reserved. Unless otherwise specified, no part of this publication may be reproduced or utilized in any form or by any means, electronic or mechanical, including photocopying and microfilm, without permission in writing from either ISO at the address below or ISO's member body in the country of the requester.

ISO copyright office
Case postale 56 • CH-1211 Geneva 20
Tel. + 41 22 749 01 11
Fax + 41 22 749 09 47
E-mail copyright@iso.org
Web www.iso.org

Published in Switzerland

© ISO 2011 – All rights reserved

Copyright International Organization for Standardization
Provided by IHS Markit under license with ANSI
No reproduction or networking permitted without license from IHS

Licensee=Becton Dickinson - Loc 1 - 61, 64/5984713001, User=Chiu, Shelly
Not for Resale, 10/14/2019 19:09:34 MDT

Foreword

ISO (the International Organization for Standardization) is a worldwide federation of national standards bodies (ISO member bodies). The work of preparing International Standards is normally carried out through ISO technical committees. Each member body interested in a subject for which a technical committee has been established has the right to be represented on that committee. International organizations, governmental and non-governmental, in liaison with ISO, also take part in the work. ISO collaborates closely with the International Electrotechnical Commission (IEC) on all matters of electrotechnical standardization.

International Standards are drafted in accordance with the rules given in the ISO/IEC Directives, Part 2.

The main task of technical committees is to prepare International Standards. Draft International Standards adopted by the technical committees are circulated to the member bodies for voting. Publication as an International Standard requires approval by at least 75 % of the member bodies casting a vote.

Attention is drawn to the possibility that some of the elements of this document may be the subject of patent rights. ISO shall not be held responsible for identifying any or all such patent rights.

ISO 11040-2 was prepared by Technical Committee ISO/TC 76, *Transfusion, infusion and injection, and blood processing equipment for medical and pharmaceutical use*.

This second edition cancels and replaces the first edition (ISO 11040-2:1994), which has been technically revised by:

— aligning this International Standard with the ISO 8871 series;

— separating requirements on plunger stoppers (this part of ISO 11040) and seals; the latter are now completely covered by ISO 11040-3;

— revising Table 1 on dimensions of plunger stoppers;

— revising the requirements on material, hardness, freedom from leakage and sliding characteristics;

— adding requirements on resistance to ageing.

ISO 11040 consists of the following parts, under the general title *Prefilled syringes*:

— *Part 1: Glass cylinders for dental local anaesthetic cartridges*

— *Part 2: Plunger stoppers for dental local anaesthetic cartridges*

— *Part 3: Seals for dental local anaesthetic cartridges*

— *Part 4: Glass barrels for injectables*

— *Part 5: Plunger stoppers for injectables*

— *Part 6: Plastic barrels for injectables*

© ISO 2011 – All rights reserved

Copyright International Organization for Standardization
Provided by IHS Markit under license with ANSI
No reproduction or networking permitted without license from IHS
Licensee=Becton Dickinson - Loc 1 - 61, 64/5984713001, User=Chiu, Shelly
Not for Resale, 10/14/2019 19:09:34 MDT

Introduction

Primary packaging components made of elastomeric materials are an integral part of medicinal products. As such, the principles of current Good Manufacturing Practices (cGMP) are applicable to the manufacturing of these components.

Principles of cGMP are described in ISO 15378, and in GMP Guidelines published by the European Community[5] and the United States of America[6].

© ISO 2011 – All rights reserved
Copyright International Organization for Standardization
Provided by IHS Markit under license with ANSI
No reproduction or networking permitted without license from IHS
Licensee=Becton Dickinson - Loc 1 - 61, 64/5984713001, User=Chiu, Shelly
Not for Resale, 10/14/2019 19:09:34 MDT

Prefilled syringes —

Part 2:
Plunger stoppers for dental local anaesthetic cartridges

1 Scope

This part of ISO 11040 specifies the shape, dimensions, material, performance requirements and labelling of plunger stoppers for dental local anaesthetic cartridges intended for single use only.

NOTE The potency, purity, stability and safety of a medicinal product during its manufacture and storage can be affected significantly by the nature and performance of the primary packaging.

2 Normative references

The following referenced documents are indispensable for the application of this document. For dated references, only the edition cited applies. For undated references, the latest edition of the referenced document (including any amendments) applies.

ISO 48, *Rubber, vulcanized or thermoplastic — Determination of hardness (hardness between 10 IRHD and 100 IRHD)* [alternative normative reference to ISO 7619-1]

ISO 3302 (all parts), *Rubber — Tolerances for products*

ISO 7619-1, *Rubber, vulcanized or thermoplastic — Determination of indentation hardness — Part 1: Durometer method (Shore hardness) [alternative normative reference to ISO 48]*

ISO 8871-1, *Elastomeric parts for parenterals and for devices for pharmaceutical use — Part 1: Extractables in aqueous autoclavates*

ISO 8871-4, *Elastomeric parts for parenterals and for devices for pharmaceutical use — Part 4: Biological requirements and test methods*

ISO 11040-1, *Prefilled syringes — Part 1: Glass cylinders for dental local anaesthetic cartridges*

ISO 11040-3, *Prefilled syringes — Part 3: Seals for dental local anaesthetic cartridges*

3 Classification

Plunger stoppers shall be classified as follows:

— Type A: plunger stoppers without cavities;

— Type B: plunger stoppers with one cavity;

— Type C: plunger stoppers with two cavities.

--`,,,,`,,,,,`,`,`,,,,,``,`-`-`,,`,,`,`,,`---

© ISO 2011 – All rights reserved

Copyright International Organization for Standardization
Provided by IHS Markit under license with ANSI
No reproduction or networking permitted without license from IHS
Licensee=Becton Dickinson - Loc 1 - 61, 64/5984713001, User=Chiu, Shelly
Not for Resale, 10/14/2019 19:09:34 MDT

4 Shape and dimensions

4.1 Shape and dimensions of plunger stoppers shall be as shown in Figure 1 and as given in Table 1.

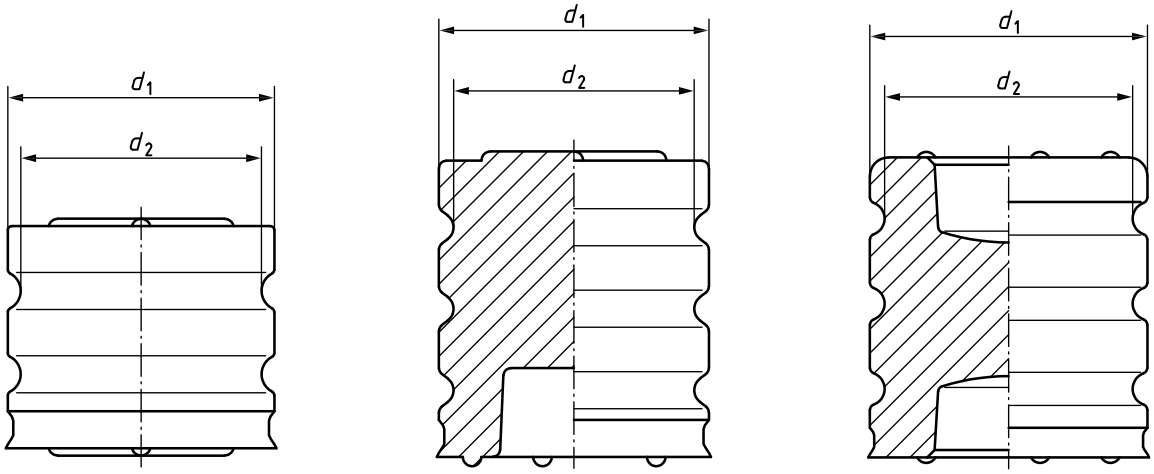

a) Type A **b) Type B** **c) Type C**

Key

d_1, d_2 diameters of plunger stoppers

Figure 1 — Shape and dimensions of plunger stoppers showing positions of cavities

Table 1 — Dimensions of plunger stoppers

Dimensions in millimetres

Nominal inner diameter of the glass cylinder[a]	Type[b]	Diameter	
		d_1 min.	d_2 max.
6,85 ± 0,15	A	7,1	6,65
6,85 ± 0,15	B	7,2	6,65
6,85 ± 0,15	C	7,4	6,65

[a] In accordance with ISO 11040-1.
[b] See Clause 3.

4.2 In order to avoid adhesion of the plunger stoppers to each other, there shall be spacers. The height of the spacers shall not exceed 0,3 mm.

The shape of the spacers should be agreed between manufacturer and cartridge assembler.

4.3 If not otherwise specified, general dimensional tolerances shall be in accordance with ISO 3302.

© ISO 2011 – All rights reserved
Copyright International Organization for Standardization
Provided by IHS Markit under license with ANSI
No reproduction or networking permitted without license from IHS
Licensee=Becton Dickinson - Loc 1 - 61, 64/5984713001, User=Chiu, Shelly
Not for Resale, 10/14/2019 19:09:34 MDT

5 Designation

Plunger stoppers can be designated according to their type; see Clause 3 and Figure 1. The designation shall be expressed as the word “plunger”, followed by a reference to this part of ISO 11040, followed by the letter designating the type.

EXAMPLE Designation of a plunger stopper of Type C (i.e. with two cavities):

Plunger ISO 11040-2 – C

6 Material

The elastomeric material used shall meet the requirements specified in Clause 7.

Plunger stoppers shall be made from the elastomeric formulation originally tested and approved by the end-user. The manufacturer of plunger stoppers shall ensure the conformance of each delivery with the type sample and compliance with previously agreed functional and compendial requirements.

The elastomeric material shall withstand two sterilization cycles when autoclaving in saturated steam at (121 ± 2) °C for 30 min without impairment of its function under the conditions of normal use. In case of other sterilization methods, e.g. irradiation, the suitability of the material shall be evaluated.

7 Requirements

7.1 General

The requirements specified in 7.2 to 7.4 represent minimum requirements which refer to the condition of the elastomeric plunger stoppers on receipt by the user.

7.2 Physical requirements

7.2.1 Hardness

The hardness agreed between manufacturer and user shall not differ from the nominal value by more than ±5 Shore A when tested in accordance with ISO 7619-1 on a special test specimen. Alternatively, the hardness can be tested on the plunger stoppers in accordance with ISO 48. If tested in accordance with ISO 48, the microhardness shall not differ by more than ±5 IRHD from the type sample.

The manufacturer should provide suitable test specimens upon request.

7.2.2 Freedom from leakage

The cartridges shall be free from leakage at the plunger when tested in accordance with the method given in Annex A.

7.2.3 Sliding characteristics

The sliding characteristics are influenced by all components of the container closure systems and process parameters, e.g. siliconization. The testing of complete systems is described in ISO 11499. The results depend on the configuration and the pretreatment (dry, kind of liquid, storage time, etc.).

© ISO 2011 – All rights reserved

Copyright International Organization for Standardization
Provided by IHS Markit under license with ANSI
No reproduction or networking permitted without license from IHS
Licensee=Becton Dickinson - Loc 1 - 61, 64/5984713001, User=Chiu, Shelly
Not for Resale, 10/14/2019 19:09:34 MDT

7.2.4 Resistance to ageing

The maximum time between the date of manufacture and the pharmaceutical use should be agreed upon between the manufacturer of the plunger stoppers and the user.

The plunger stoppers shall maintain their performance characteristics throughout the entire shelf life of the medicinal product. The shelf life is determined by the stability test conducted by the user.

NOTE Ageing depends upon the storage and handling conditions. A guide to storage of vulcanized rubber is given in ISO 2230.

7.3 Chemical requirements

The requirements in ISO 8871-1 apply.

7.4 Biological requirements

The requirements in ISO 8871-4 apply.

8 Labelling

Packed plunger stoppers which meet the requirements of this part of ISO 11040 can be labelled with the designation given in Clause 5.

© ISO 2011 – All rights reserved
Copyright International Organization for Standardization
Provided by IHS Markit under license with ANSI
No reproduction or networking permitted without license from IHS
Licensee=Becton Dickinson - Loc 1 - 61, 64/5984713001, User=Chiu, Shelly
Not for Resale, 10/14/2019 19:09:34 MDT

Annex A
(normative)

Leakage test

A.1 Principle

Water-filled cartridges are prepared using the plunger stoppers to be tested. By means of a suitable device, force is applied to the plunger stopper during a defined time interval. Any observed leakage is recorded.

The leakage test of the plunger stoppers and the seals (see ISO 11040-3) can be combined.

A.2 Apparatus

A.2.1 **Cartridge cylinders**, in accordance with ISO 11040-1.

A.2.2 **Plunger stoppers**, to be tested.

A.2.3 **Seals**, in accordance with ISO 11040-3.

A.2.4 **Suitable equipment**, to prepare water-filled cartridges.

A.2.5 **Cartridge holder**, for example as specified in ISO 9997 or ISO 11499.

A.2.6 **Pressurizing device**, capable of applying a force of (30 ± 3) N.

A.3 Procedure

A.3.1 Fill 10 cartridges completely with water, ensuring that they are free of any air, using the plunger stoppers to be tested.

The water may be replaced by a coloured solution in order to improve the visibility of the leakage.

A.3.2 Place the first cartridge, mounted in the cartridge holder (A.2.5), into the pressurizing device (A.2.6), and apply a force of (30 ± 1) N for 1 min. Check for leakage at the plunger stopper.

SAFETY PRECAUTIONS — Ensure that adequate safety measures are in place to protect the operator.

A.3.3 Repeat the operation described in A.3.2 on the remaining cartridges.

A.4 Expression of results

Report the number of leakages observed at the plunger stopper.

Report whether the testing of the plunger stoppers and the seals (see ISO 11040-3) has been combined.

© ISO 2011 – All rights reserved

Copyright International Organization for Standardization
Provided by IHS Markit under license with ANSI
No reproduction or networking permitted without license from IHS
Licensee=Becton Dickinson - Loc 1 - 61, 64/5984713001, User=Chiu, Shelly
Not for Resale, 10/14/2019 19:09:34 MDT

Bibliography

[1] ISO 2230, *Rubber products — Guidelines for storage*

[2] ISO 9997, *Dental cartridge syringes*

[3] ISO 11499, *Dentistry — Single-use cartridges for local anaesthetics*

[4] ISO 15378, *Primary packaging materials for medicinal products — Particular requirements for the application of ISO 9001:2008, with reference to Good Manufacturing Practice (GMP)*

[5] *EC Guide to Good Manufacturing Practice for Medicinal Products*, III/2244/87, Rev. 3 – January 1998 as amended

[6] *US/FDA Code of Federal Regulations*

© ISO 2011 – All rights reserved

Copyright International Organization for Standardization
Provided by IHS Markit under license with ANSI
No reproduction or networking permitted without license from IHS

Licensee=Becton Dickinson - Loc 1 - 61, 64/5984713001, User=Chiu, Shelly
Not for Resale, 10/14/2019 19:09:34 MDT

--`,,,,`,,,,,`,`,`,,,,,```,`-`-`,,`,,`,`,,`---

Copyright International Organization for Standardization
Provided by IHS Markit under license with ANSI
No reproduction or networking permitted without license from IHS

Licensee=Becton Dickinson - Loc 1 - 61, 64/5984713001, User=Chiu, Shelly
Not for Resale, 10/14/2019 19:09:34 MDT

ICS 11.040.10; 11.040.25; 11.060.20

Price based on 6 pages

© ISO 2011 – All rights reserved

Copyright International Organization for Standardization
Provided by IHS Markit under license with ANSI
No reproduction or networking permitted without license from IHS

Licensee=Becton Dickinson - Loc 1 - 61, 64/5984713001, User=Chiu, Shelly
Not for Resale, 10/14/2019 19:09:34 MDT